SWITCH CLOCK

MODEL: 091-257

The 091-257 is a universal switch mount accessory that displays a real-time clock on an OLED panel. The Switch Clock displays a 24-hour numerical value of a clock (military time). The clock is accurate to 1-sec per/day and has a current draw of only 6.5-milliamps. Installation is simple since the display is designed into standard switch panel housing. A 1.45” x 0.83” panel cut-out is all that’s required. Wiring is also simple. Typically wired into a single battery system; connect red to battery positive and black to battery negative. Use pin-3 to turn the display on or off. Doing so also decreases the input current to less than 0.6mA when the display is off. Kussmaul 3-year warranty applies.

Front View

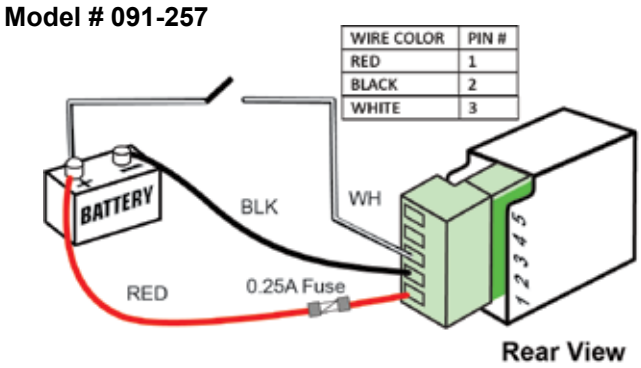

Wiring Diagram

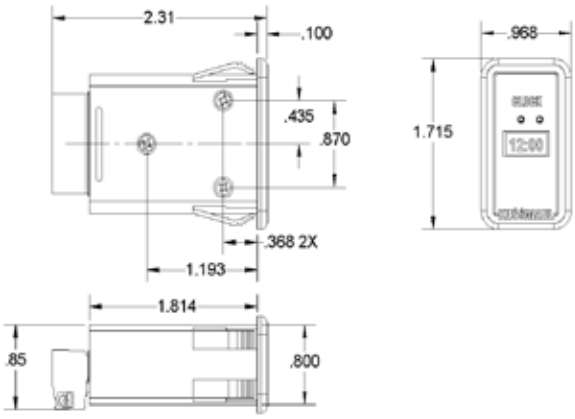

Outline Drawing

Specifications:

Input Voltage: 10 to 30 Vdc
(Min: 8 Vdc; Max: 32 Vdc)

Input Current: 6.5mA with active display, 0.6mA in sleep mode

Temperature Range:
-40°F to 120°F, -20°C to 60°C

Cutout Size: 1.45” x 0.83”

Time Keeping: +/- 1second/day

Warranty: 3 years

170 Cherry Avenue
West Sayville, NY 11796
www.kussmaul.com

KUSSMAUL™ ELECTRONICS
ENERGIZED AND READY, WHEN SECONDS COUNT

Ph: 800-346-0857
Fax: 631-567-5826
sales@kussmaul.com

File: IM_091-257_revA
Revised By: PSS/JRN
Date: 08-07-2018